LNG2019 SHANGHAI 1-5 APRIL
PRESENTED BY

ARUN LNG RECEIVING HUB & REGASIFICATION TERMINAL – THE FIRST CONVERSION OF LNG PLANT BECOME LNG REGASIFICATION TERMINAL

Nuranti, Sr. Engineering I Process Tech. Optimization, PT Pertamina (Persero), Indonesia
Ratio Fitra Maliki, Sr. Engineer I Electrical & Instrument, PT Pertamina (Persero), Indonesia
Ziyad Auliy, Mechanical & Reliability Engineer, PT Perta Arun Gas, Indonesia

Arun LNG Plant, located in Lhokseumawe, has been sets as a new role as the Arun LNG Receiving and Regasification Terminal. The receiving and regasification activities has been in operation since March 2015 with regasification capacity up to 400MMScfd. This facility operated by PT Perta Arun Gas, subsidiary of PT Pertamina (Persero). The conversion of ±37years old LNG Plant become the LNG receiving and regasification terminal is the first of its kind in the world.

Several challenges were tackled during this project execution, such as how to utilized the longstanding facilities with almost 37 years' old that could lead to declining of efficiency (losses and reliability), how to modify the system to get the flexibility in receiving various LNG specification, and how to manage the risks during the project execution. Even though the existing facility would not produce LNG anymore, the gas processing facility will be still in operation to process the remaining feed gas and sent the produced gas to customers (PT Pupuk Iskandar Muda and PT KKA).

By using the existing facilities and adding the new facilities such as Open Rack Vaporizer (ORV), High Pressure LNG Pumps, LNG Vapor Return Blower, the plant has been successfully converted into LNG Receiving & Regasification Terminal.

Beside the regasification, In the future, Arun Terminal will continue to be developed. Currently there are several upcoming projects are being developed, such as the revitalization of LNG Hub, coolingdown, bunkering, and breakbulking to the small LNG Carrier.

HOSTED BY
SUPPORTED BY
SHANGHAI MUNICIPAL PEOPLE'S GOVERNMENT

I. INTRODUCTION

Arun Liquified Natural Gas (LNG) plant located at Lhokseumawe- Aceh, Indonesia is one of the pioneers of LNG liquefaction industry in the world. In its peak, the LNG yearly production yielded reaching approximately of 12.5 million tons or more than 200 cargoes.

Arun LNG production has been declined since early 1995 along with the declined of gas deliverability of the upstream gas field and there were no new prospected gas reserves. With the waning supply from gas fields, Arun LNG Plant ceased its activity after 37 years of operation. The last LNG cargo was exported on October 15, 2014.

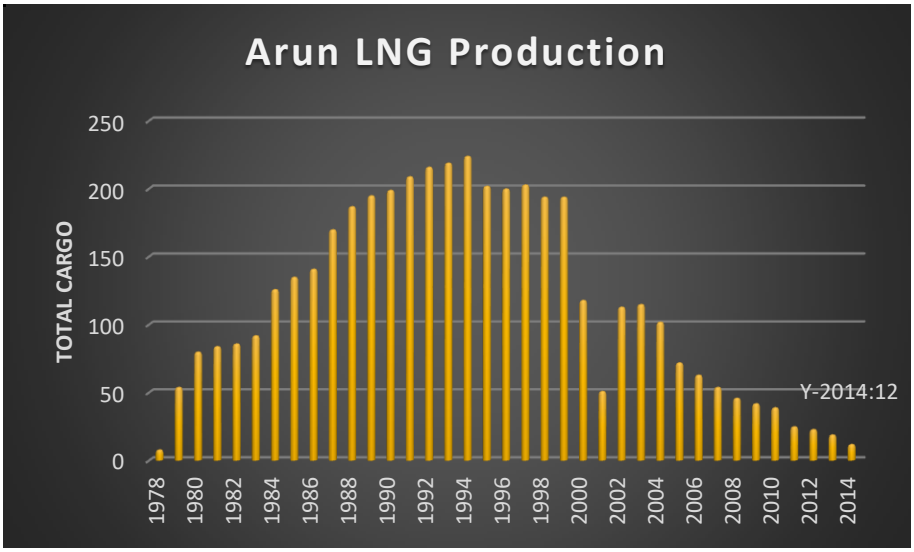

Figure-1 Arun LNG Production

The unavailability of gas supply will close down the others industries in the area surrounding. This situation could lead to decommissioning of industries in Aceh area and became the concern of Indonesian government since it will directly impact to the economic activities in that area, and expose to the social issues in the near future. Therefore, the government through Pertamina then initiated the revitalization project of Arun Plant, converting LNG Production Plant into LNG Receiving Hub & Regasification Terminal, the first of its kind in the world.

Arun's LNG Receiving Hub & Regasification Terminal has now converted its function into regasified LNG facility that operated by PT Perta Arun Gas (subsidiary of Pertamina), and distribute the gas to the Gas Power Plant of PT PLN (Persero) in Belawan through to 350km of Arun-Belawan open access gas pipeline that belongs to PT Pertagas (subsidiary of Pertamina). The regasified gas also send to another Gas Power Plant of PT PLN (Persero) in Lhokseumawe (side by side with Arun location).

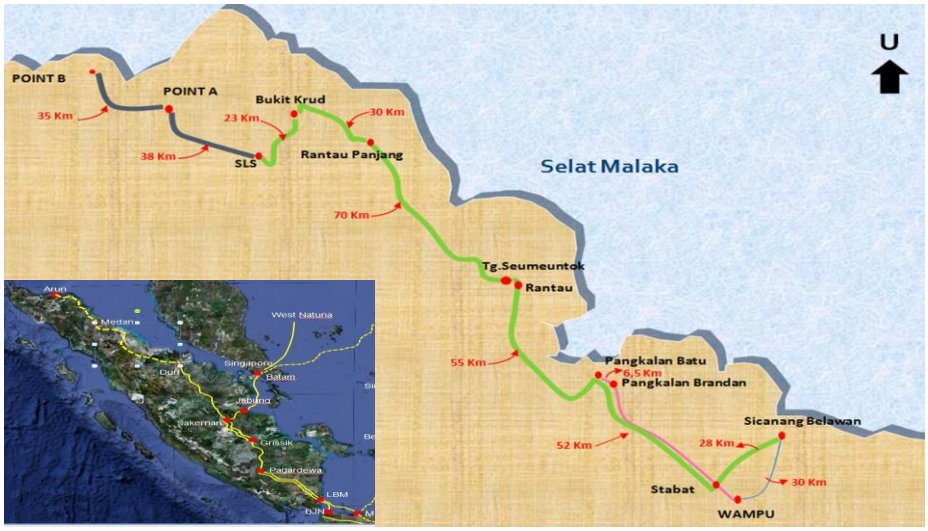

Figure-2 Arun-Belawan Pipelines

In the future, Arun LNG Regasification Terminal will continue to be developed. Currently there are several upcoming projects are being developed, such as the revitalization of LNG trucking, LNG Hub, cooling down, bunkering, and break bulking to the small LNG Carrier.

II. PRA-PROJECT ASSESSMENT

Several studies had performed before execute the project. Some challenges such as how to utilized the longstanding facilities with almost 37 years' old that could lead to declining of efficiency (losses and reliability), how to modify the system to get the flexibility in receiving various LNG specification, and how to manage the risks during the project execution. Below is list of studies before executing the project.

A. FEED (Front End Engineering Design) Study

FEED study had performed to study this project. The concept of the conversion project was primarily to utilize the existing LNG storages and loading facilities as receiving and hub terminals and add the new facilities such as LNG regasification and gas delivery to the gas customers. The conversion project also has utilized those parts of the existing facilities to be used in order to optimized and reduced the capital expenditure of the project.

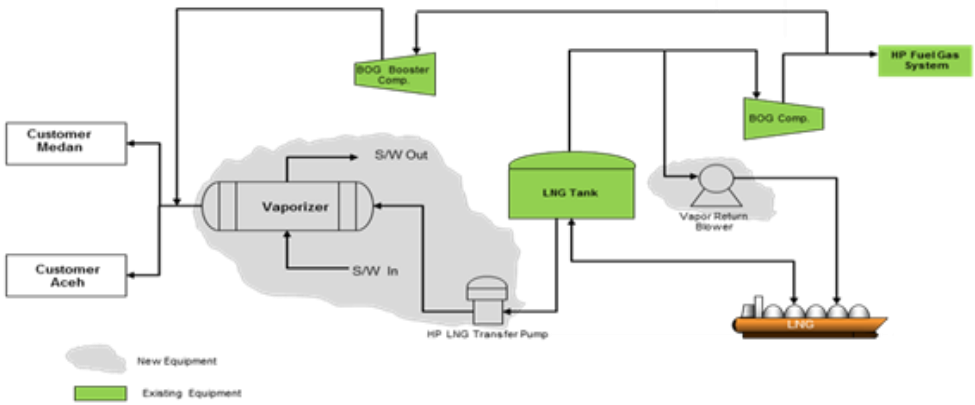

Figure-3 Flow Diagram of Arun LNG Receiving & Regasification Plant

The existing equipment to be used includes:

- 1 set of LNG loading Berth jetty #3
  The jetty #3 shall be used for unloading & loading facility form/to LNG Carrier to/from LNG storage tanks. Since at previous design only used for loading facility, modification line was done to facilitate the unloading activity by added some of jumper line, control valves along the transfer lines, and LNG vapor return blower to (K-2302) to return the Boil Off Gas (BOG) generated during unloading activity.
- 4 ea LNG Storage Tanks (F-6001/6002/6003/6005)
  The modification line was done to provide the unloading activity by added jumper line through bottom filling line. Two LNG Tank shall be used for Regasification LNG (F-6003/5) and the other ones shall be used as a hub facility (F-6001/2).
- 5 ea LNG Circulation Pumps (G-6802 A/B/C/D/E)
  Those circulation pumps shall be used to flow the LNG along transfer lines to keep it cool.
- 4 ea BOG Compressor (K-6801 A/B/C/D)
  BOG Compressor shall be used to handle BOG generated from LNG Tank to the fuel system and others.
- BOG Booster Compressor (K-2501 A) – Re wheeling
  If there's BOG generated exceed the fuel system requirement, the excess BOG shall be compressed by this booster compressor (K-2501A) and combined it with the send out gas from regasification.
- 6 ea LNG Loading Pump (G-6801 A/B/C/D/L/M)
  The loading pumps shall be used for Hub activity to reload the LNG from storage tanks to the LNG Carrier.
- Utilities that includes Nitrogen System, Plant Air System, Seawater facilities, water treatment system, and fire water station.

Additional Facilities to be installed are includes:

- LNG Transfer Pump (G-2304 A/B/C)
- Primary LNG Transfer Pump (G-2306 A/B)
- LNG Open Rack Vaporizer (E-2302 A/B/C)
- LNG Back-Up Vaporizer (E-2304 A/B)
- LNG Back-Up Pump (G-2305)
- Fuel Gas Electric Heater (E-2303 A/B)
- LNG Vapor Return Blower (K-2302 A/B)
- Piping & control system modification

LNG from LNG ship is transferred to LNG Storage Tank by Cargo Pump. LNG from storage tank is pumped by LNG Transfer Pump then sent to regasification process and vaporize by using ORV (Open Rack Vaporizer). This vaporizer is using seawater as heating media to vaporize LNG. Vapor LNG from ORV is sent to costumer. During LNG unloading from ship to LNG storage tank, BOG (Boil of Gas) produces significantly. This BOG will be sent and split into two stream, one stream as BOG Return to

ship and another stream sent to BOG Compressor to be used as HP Fuel Gas for Power Generator. While there is excess HP Fuel Gas, it will be recompressed by BOG Booster Compressor, then the discharge will be combined with the outlet LNG Vaporizer and sent to customer.

B. Remaining Life Assessment

The remaining life assessment (RLA) is the analysis study to know the operational lifetimes of the equipment. This assessment need to be performed since several main equipment to be used is the longstanding facilities with almost 37 years' old that could lead to declining of efficiency (losses and reliability) and to prevent failure to the critical equipment.

The three were three steps for RLA:

a. Collect and review the design & operation history

b. Collect and review the maintenance and inspection history (by using NDT (non-destructive test) and DT (destructive))

c. Scientific analysis based on step 1 & 2

Below is the list of inspection activity:

No	Equipment	Inspection
1	Power Generator, PG-9001 A/C, design power 20 MW	• V.I Visual Inspection • I.M Insitu Metallography (casing only) • Power output • Resistancy of insulation; cable, electric generator (stator and rotor). • Resistance of ground wire. • Current flowing on the cable / conductor channel. • Vibration test dan review the record
2	Gas Booster Compressor, K-2501 A, Electric Motor driver	• V.I Visual Inspection • L.P Liquid Penetrant Test • Energy consumption of electric motors • Resistancy of insulation; cable, electric generator (stator and rotor). • Resistance of ground wire. • Current flowing on the cable / conductor channel. • Vibration test dan review the record
3	BOG Compressor, K-6801 A/B/C/D, Electric Motor driver dengan power 3.35 MW	
4	Submersible LNG Loading Pump, G-6801 A/B/C/D/L/M, Electric Motor driver 0.75 MW	• V.I Visual Inspection • Energy consumption of electric motors • Resistancy of insulation; cable, electric generator (stator and rotor). • Resistance of ground wire. • Current flowing on the cable / conductor channel. • Vibration test dan review the record
5	Submersible LNG Circulation Pump, G-6802 A/B/C/D/E, Electric Motor driver 0.1 MW	
6	Sea water pumps, G-7201 E/F/G/H dengan motor driver 2.6 MW	
7	Air Compressor, K-7401 dengan Electric Motor Driver A /B	
8	LNG Loading Arms,	• Mechanical Test Hardness • Martensite test • NDT – Radiography, dye penetrant and analysed

9	Double Wall Above Ground LNG Tanks, F-6001/ 2/ 3/5	• Thermography analysis • Theodolit survey
10	Pipeline and insulation	• V.I Visual Inspection • Thermal conductivity test • Moisture content test
11	Pile of seawater intake	Pipe pile condition test : • UT • Coating • Resitivity • PH • Potential
12	Nitrogen plant	Visual inspection, and reviewed the operation data and maintenance
13	Electric cable > 4 kv	• The resistance of cable insulation • Resistance of ground wire. • Current flowing on the cable / conductor channel.
14	Switchgear 33 kv	

The result from this assessment is that the equipment such as LNG pump and Compressor has already degradation became 75% from the design and need to be overhaul, and for the loading arm need to checked the hydraulic system. For the inspection to the LNG Tank, the result of deviation still acceptable.

C. <u>Risk Assessment to the Existing Facility</u>

The purpose of formulating this Risk Assessment is to identify and evaluate potential risks and hazards of operational and safety aspects, and develop mitigation plans in the receiving and regasification terminal project, ensuring the project does not interrupt the existing LNG production and loading activities.

The method to be used for the risk assessment was used PHA (Project Hazard Analysis) with what-if/checklist and risk matrix.

The result of this assessment that there was five tie-in work could lead to significant risk and some of gas processing facilities need to be shutdown. Those tie-in works are related to the seawater system, flare header, fuel gas system, and LNG Tank area. Several mitigations had performed to maintain those potential significant risk.

D. **<u>LNG Tank F-6001 Assessment</u>**

There was indicated gas leak on the LNG Tank F-6001 and F-6002. The assessment was performed to evaluate the source of leak. This assessment was considering as preliminary because will not assess bottom outer plate. However, this assessment included overall condition for extension life of the tank.

There was two step for the LNG Tank inspection:

a. External Inspection

External inspection result is drain pipes in good condition even though some water was observed. There is a gap of 25 to 35 mm between outermost of outer tank annular plate and concrete ring foundation since bituminous sheet were already gone. The plate condition is in heavy corrosion and excessive deterioration.

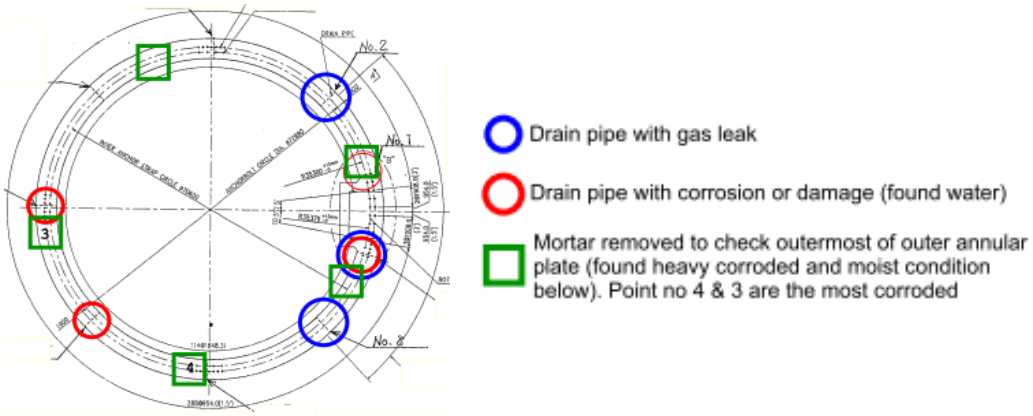

Figure-4 External Inspection Finding

b. Internal Inspection

Tank internal inspection showed inner tank shell and bottom plate are still in good condition. There is no thickness degradation or corrosion, as well as no deterioration on critical weld seam of inner tank welded parts after dye penetrant test.

Based on those inspections, it was decided to have a short-term repair approach as follows; repair sealant, install bituminous sheet and mortar, as well as seal hydrocarbon leak points. Furthermore, corroded parts of outer tank and bottom tank heater were repaired.

III. PROJECT EXECUTION

A. Historical timeline

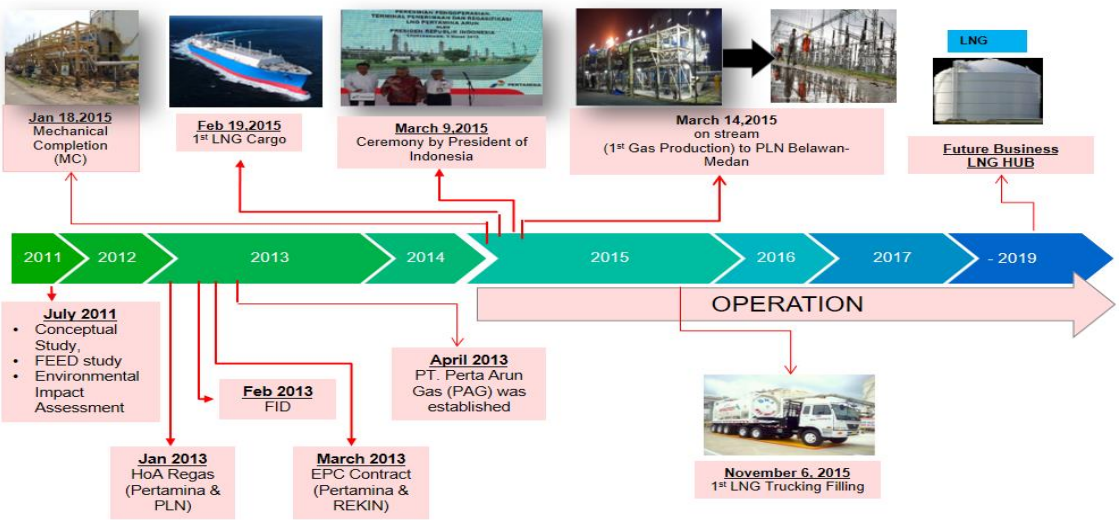

Terminal construction: Construction commenced in March 2013 and was successfully completed in early 2015. The timely construction has displayed Pertaminas's excellent progress in meeting its scheduled in line with the termination of Arun LNG Plant operation on End 2014.

Startup and operations: After mechanical, commissioning and start-up the regasification terminal was on stream as of January 2015. Its first LNG cargo was supplied from Tangguh LNG terminal on February 19th,2014 with a volume of 119,000m3. The upcoming projects are being developed, such as the revitalization LNG Hub of LNG trucking, cooling down, bunkering, and break bulking to the small LNG Carrier

B. <u>Location</u>

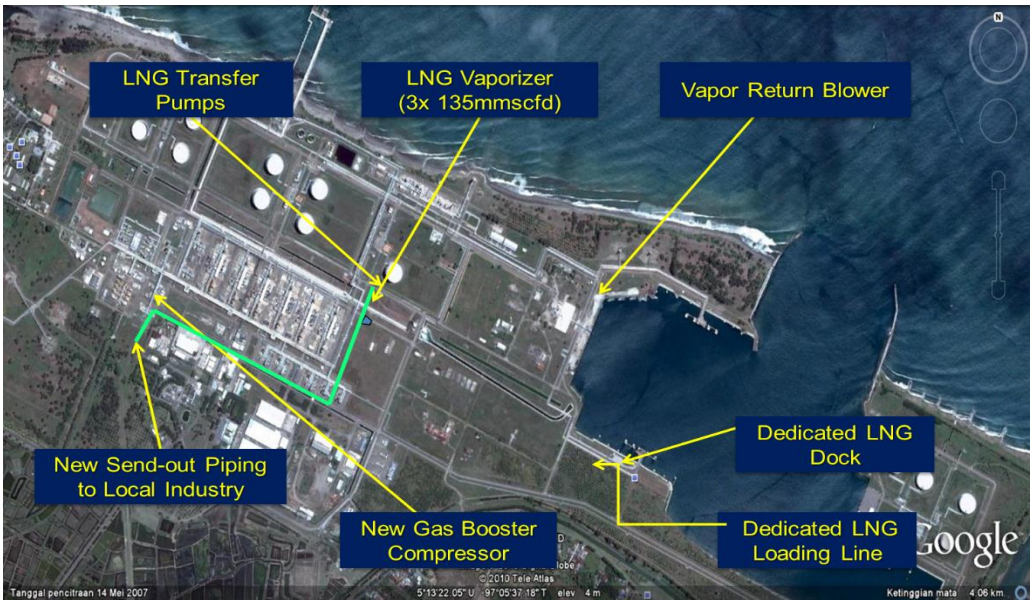

IV. CONCLUSION

There was possibility to re-use the 37 years old of longstanding equipment in the LNG Terminal with several assessments. The key point to prolong the life time of equipment was based on maintenance & reliability program during the previous operation. Good maintenance program would result a good condition and could last longer. Besides that, several assessments need to be performed such inspections and reconditions/overhaul, etc.

Every LNG Producing Plant in the end would facing the declining of the feed gas and the conversion of the LNG producing plant to become LNG receiving and regasification terminal would be the option to get the added value and maintain the gas supply to the customers.