LNG2019 SHANGHAI 1-5 APRIL
PRESENTED BY

LNG FOR AIRCRAFTS

Julian Terpitz

TGE Gas Engineering GmbH, Bonn / Germany

LNG as fuel is not yet in operational use for aircrafts. However, the Russian Tupolev Tu-155 flew LNG-fueled during the late 1980's as part of a testing program.
In Germany, during the years 2010-2013 a feasibility study including some bench testing has been carried-out by the companies TGE gas Engineering and Air-LNG. This was part of the project alliance FAIR ("Future Aircraft Research"), also joined by Airbus, EADS, Lufthansa, DLR, MTU, Airport Hamburg and funded by the Federal Ministry of Economics and Technology based on a resolution of the German Bundestag.
The thoroughly positive result of this feasibility study including combustion simulations, supported by combustion chamber tests, shows a clear reduction of several environmentally harmful exhaust gas components. Compared to Jet-Fuel (Kerosene) significant emission reductions can be expected from NOx, CO2, Sulfur, Soot, Aromatics and vapor trails.
The feasibility study targeted the retrofit of existing Airbus aircrafts from Kerosene to dual-fuel operation LNG and Kerosene. Looking to Europe, as no time consuming new EASA ("European Aviation Safety Agency") approval for the whole aircraft is assumed – the fuselage remains unchanged -, the retrofit is considered as realistic within just a few years of development.
A further short-term application could be the LNG-fueling of the aircraft APU ("Auxiliary Power Unit") that supplies the energy demand during taxiing at ground level. If all aircraft APU's fuel would be changed to LNG, the positive impact in the proximity of airports would be remarkable.
The presentation details the technology status, environmental advantages and future business potential.

HOSTED BY

SUPPORTED BY
SHANGHAI MUNICIPAL PEOPLE'S GOVERNMENT

Introduction

The BMWi (German “Bundesministerium für Wirtschaft und Technologie”)- sponsored project alliance “BurnFair“ (LuFo IV-3) has been successfully executed in cooperation with Airbus, EADS-Innovations, DLR, Flughafen Hamburg, Lufthansa, MTU and TGE Gas Engineering/AirLNG between 2010 and 2013.

The feasibility of LNG fueled aircrafts has been investigated and shown, in particular with regard to safety, weight and volume. The LNG fuel concept has already been pre-developed including a survey of required special equipment and relevant suppliers. Laboratory tests and simulations have been run for key equipment. By doing a retrofit of existing aircraft a complete new European Aviation Safety Agency (EASA) approval process is avoided, the fuselage remains unchanged. This would technically allow an operation in a few years. In addition, a smooth transition scenario from fossil LNG to mixing with synthetic- or Bio-LNG would also be possible on long-term view.

In simple terms such an LNG retrofit in existing aircrafts would be analogue to the well-known LPG (Liquid Petrol Gas) retrofit in the automotive industry. While doing this, parts of the available cargo room are used based on LD3/LD6 modules. This storage concept of additional fuel corresponds to the “additional center tanks” (ACT), already being in operation for additional jet-fuel in the A319 for example. Positive effects during flight operation result from prolonged engine lifetime and reduced emissions. Furthermore, there is the long-term possibility to optimize new aircrafts for exclusive LNG drive by reduction of fuel system weight and volume.

Emissions

Compared to Jet-Fuel (Kerosene) the following reductions can approximately be expected:

- NOx -80%
- CO2 -25%
- Sulfur, Soot, Aromatics -100%
- Vapor Trail less, not quantified

Out of these the vapor trail has not yet been considered as environmental damaging so far. The German aerospace center DLR has come to the conclusion during research in the recent years that cirrus clouds caused by worldwide aircraft traffic and vapor trails may significantly impact the greenhouse effect. Due to absence of condensation nucleus in the LNG-fueled aircraft exhaust – essentially soot – a considerable reduction in any vapor trail is expected.

Infrastructure

LNG infrastructure is worldwide available and assumed to increase. LNG storages at airports would be required as well as transponder/fueling vehicles or fixed fueling installations for aircrafts, e.g. underground LNG distribution headers at airport.

Equipment

Equipment	Manufacturer/Standard
Transponder / Fueling Vehicle	NASA (CR-2700/year 1976)
LD3/LD6 Container	Standard
Vacuum Lines	NEXANS/CRYOFLEX
LNG Pumps	ACD, Cryostar
LNG On-board Vaporisier	NASA (TIS R74AEG163/year 1974)
Aircraft Engine	GE, MTU

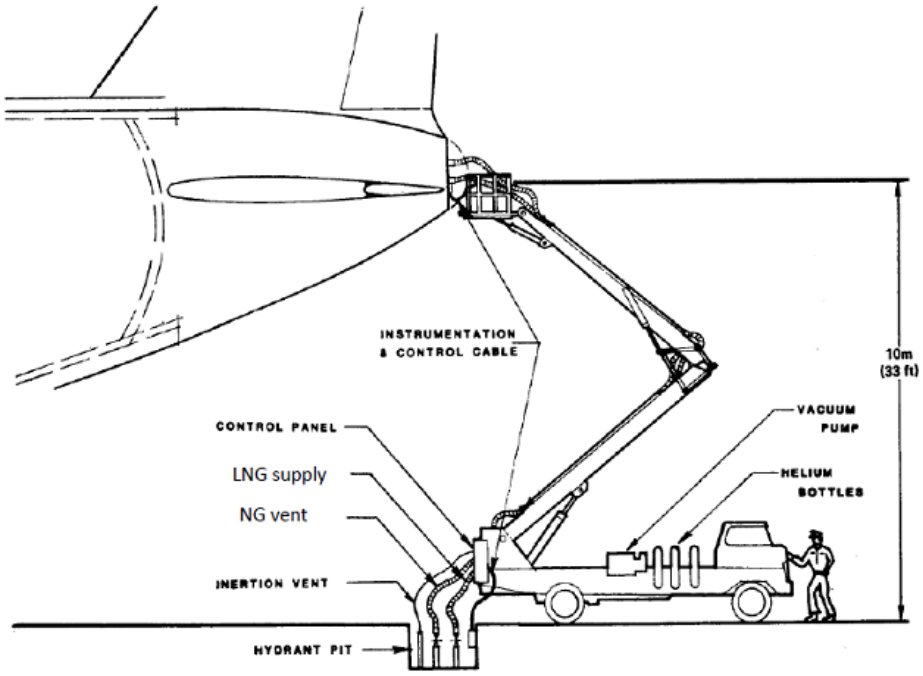

Aircraft LNG Fueling LNG from hydrant through transponder vehicle (NASA)

During the feasibility study process and LNG key equipment have been investigated and defined. Several components are technically state of the art in the LNG industry, however, would still require the approval of the aviation safety agencies. Vacuum insulated lines, valves, pumps, instrumentation etc. are well known and

developed components in the LNG industry, particularly also in terms of safety and reliability. These components would rather be considered for aircraft optimization, mainly the minimization of weight.

LNG On-Board Tank

The on-board LNG storage equipment is considered as the most critical component. This has been designed and subjected to a broad testing program. Main tests have been to cryogenic filling, boil-off, lifetime and emergency loads impact and pressure testing.

LNG aircraft fuel tank prototype including LD3 supports (TGE)

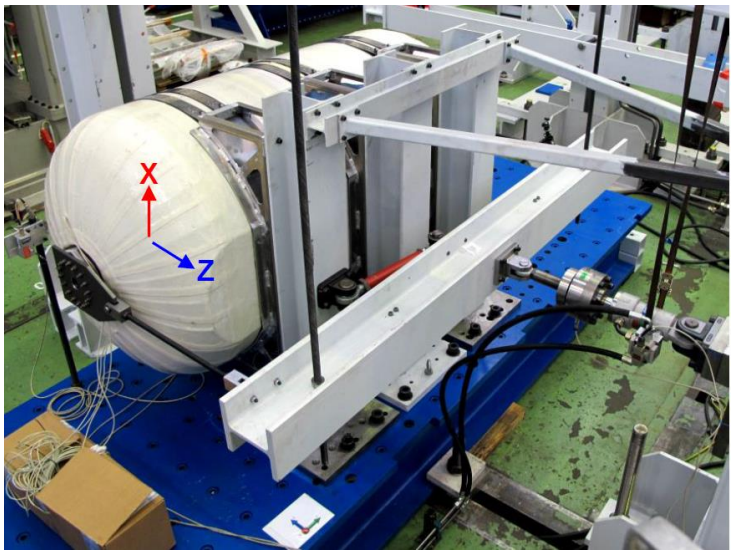

Insulated LNG tank at 3D load test facility (Testing at IMA Dresden)

LNG tank cryo-test at -196°C (Testing at IMA Dresden)

All tests resulted in the general qualification for use of this tank type.

Process Developments - Fueling Vehicle for Aircraft

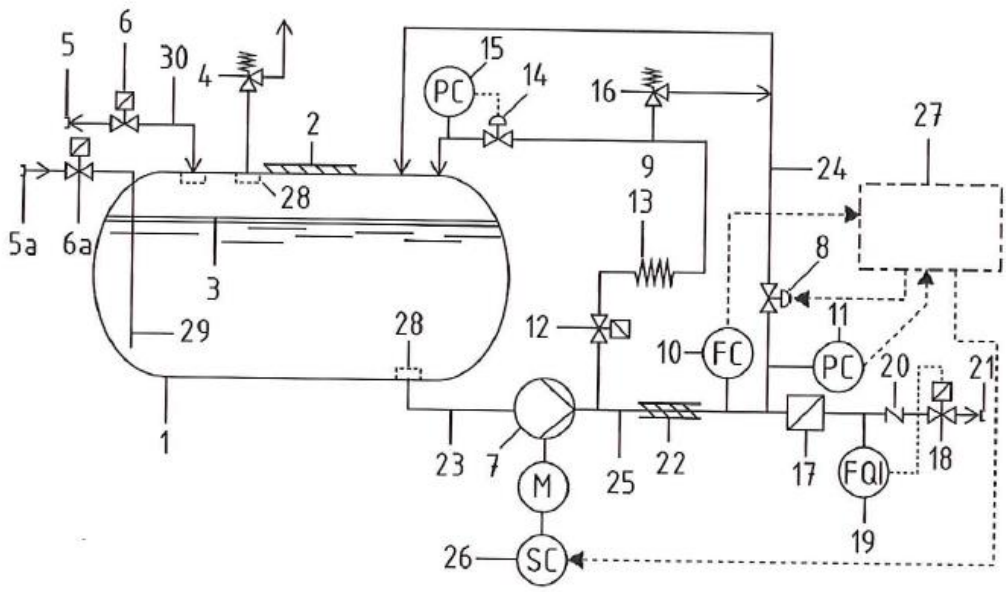

The concept of a fueling vehicle is described. Due to higher back-pressure in the LNG storage tanks of the aircraft and the high unloading rate due to a short fueling time, the energy demand of the pump is high. Due to the design, electrically driven pumps are possible only. This requires a high generator power, which would also be enough to drive the vehicle. The required pump net positive suction head (NPSH) is ensured by a gas pressure buffer above the liquid, whereby a condensation of the pressure gas is prevented by a floating insulation layer on the LNG.

Process Developments - Procedure for Retrofitting an Aircraft

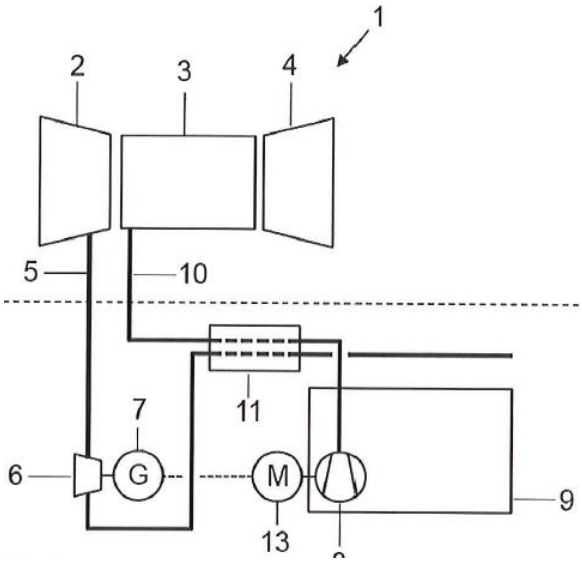

For conversion to LNG there must be a solution for providing the propulsion energy for driving the LNG fuel pumps. In existing aircraft, the generator power is too low, especially in the full load range during take-off. It is proposed to expand "Bleed Air" from the turbine engine compressor, which drives a power generator.

Process Developments - Supply of a Pump with Cryogenic Liquid

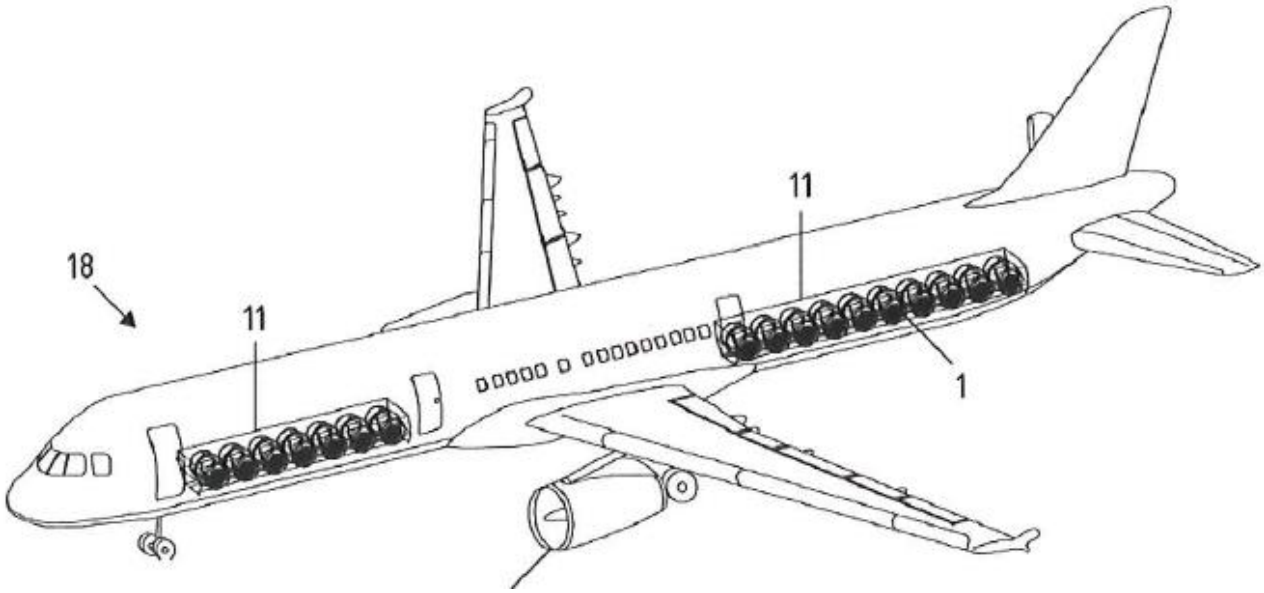

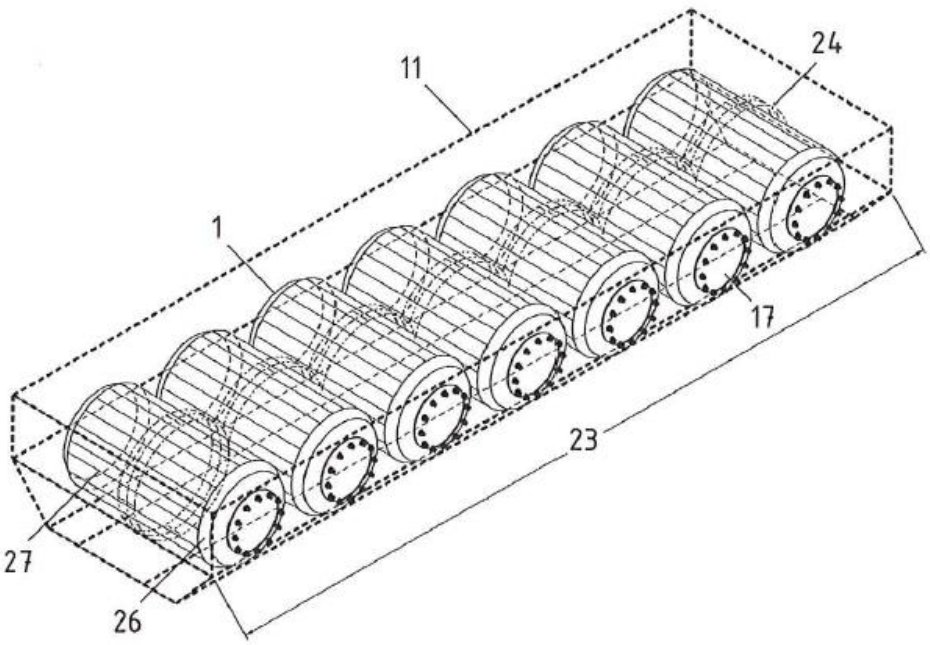

LD3/LD6 LNG storage containers are used in the lower freight hold. The required increased NPSH for the LNG pumps is ensured by a gas pressure buffer above the liquid, whereby a condensation of the pressure gas is prevented by a floating insulation layer on the LNG.

Process Developments - Supply of a pump with cryogenic fluid (intermediate buffer)

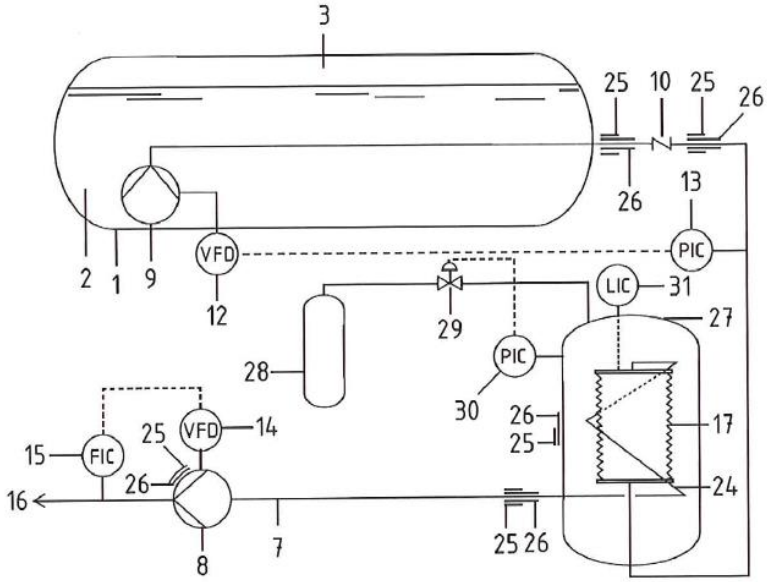

During flight, turbulences can cause a disruption of the pump's fluid stream. For assurance of a continuous engine supply, intermediate buffering is obligatory between the low-pressure pump and the high-pressure pump. A gas

buffer or spring will immediately provide the pressure for the high-pressure pump, in case of an interrupted stream from the upstream low-pressure pump.

Barrier to market entry

Technically and economically there are not identified “the show stopper”. In contrary, in case of low future LNG price level, LNG fueled aircraft can be much more efficient in terms of operational costs.

The “Chicken-Egg” problem as observed for ssLNG business in some regions of the world is more challenging here. Reasons for this are

- More stakeholders involved
- No aircraft in operation without secured airport LNG infrastructure
- No airport LNG infrastructure without a long-term secured business
- Considerable investment for aircraft manufacturer and aviation company
- Limited interest of established jet-fuel suppliers changing all infrastructure
- Aircraft equipment must have the approval from aviation safety agencies

Out of this, the change of technology will require political decisions, driving the transformation

Vision

Someone will cut the knot, this need to come from aircraft owners and be realized by aircraft manufacturers. The potential for a short-term transition scenario to worldwide lower emission aircraft operation is high by revamping existing aircrafts.